Problem Set 2 Hint Sheet

Please note this document is a hint sheet. The information contained herein is meant to guide you up to the main equations required to solve a given circuit. If you are able to get up to this point, then this document has served its chief purpose. The main focus of this course is on the concepts behind these equations. Therefore, the details on how to solve these equations lies outside of this course and therefore omitted from this document. The details contained in this document are meant to supplement the numerical answers given at the end of the problem set.

Nodal Voltage Analysis

Q1 [Alexander Problem 3.3]
Only one nodal voltage equation is required for this problem and this is the nodal voltage v_o:

Apply KCL at node v_o: $-8+\frac{v_o}{10}+\frac{v_o}{20}+\frac{v_o}{30}+20+\frac{v_o}{60}=0$ ⇨ v_o = -60 V

The above voltage appears across all the resistors in the circuit and thus can be used to obtain the currents through each resistor using Ohm's law.

Q2 [Alexander Problem 3.5]
Only one nodal voltage equation is required for this problem and this is the nodal voltage v_o with the bottom node used as reference (i.e. 0 V). In applying KCL to node v_o, you need an expression to describe the voltage difference across the resistors in each branch:

Apply KCL at node v_o: $\frac{v_o-30}{2k}+\frac{v_o-20}{5k}+\frac{v_o}{4k}+=0$ ⇨ v_o = 20 V

Q3 [Alexander Problem 3.11]
Only one nodal voltage equation is required for this problem and this is the nodal voltage V_o:

Apply KCL at node V_o: $\frac{V_o-60}{12}+\frac{V_o+24}{6}+\frac{V_o}{12}+=0$ ⇨ V_o = 3 V

Use V_o to find the voltage differences across each resistor. Then use the respective voltage differences across each resistor to find the power consumed by each resistor.

Q4 [Alexander Problem 3.32]
No nodal voltage equations are required to analyze this circuit. The nodal voltages can be found by adding up the voltages from one node to the next.

v_2 is known through the 12 V voltage source that sets the voltage difference between V_2 and ground: ⇨ v_2 = 12 V

Then consider the following relations: $v_2 - v_1$ = 10 V; $v_2 - v_3$ = 20 V.

Q5 [Modified from Problem 3.12]

The minimum number of independent equations required for this problem is 2: one node equation for V_1 and another for V_2. We choose the bottom mode of the circuit to be the reference node.

Apply KCL at node V_1: $\frac{V_1}{R_1} + \boxed{\frac{V_1 - V_s - V_2}{R_2}} = I_s$ ⇨ $5V_1 - 4V_2 = 40$ (1)

$R_1 = 8\ \Omega$, $R_2 = 2\ \Omega$, $R_3 = 5\ \Omega$, $R_4 = 6\ \Omega$, $R_L = 4\ \Omega$, $V_S = 4$ V, $I_S = 3$ A.

The highlighted term represents the current through R_2 running away from node V_1. To obtain this term, you must correctly describe the voltage difference across R_2 to apply Ohm's law correctly. One the left side of R_2, the voltage is V_1 (relative to the reference node). On the right side of the R2, the voltage is $V_2 + V_S$ (relative to the reference node).

Apply KCL at node V_2: $\frac{V_1 - V_s - V_2}{R_2} = \frac{V_2}{R_3} + \frac{V_2}{R_4 + R_L}$ ⇨ $5V_1 - 8V_2 = 20$ (2)

⇨ Solve (1) and (2): $V_1 = 12$ V, $V_2 = 5$ V

Use voltage divider rule to find voltage across R_L: $V_L = (4/10)*V_2 = 2$ V. With V_L known, V_L can be used to find the power consumed by R_L. Alternatively, you can use V_2 to find the current through R_L and use the current through R_L to find the power consumed by R_L.

Q6 [Modified from Rizzoni Problem 3.62]

Two nodal voltage equations required: one for node A and one for node B

Apply KCL at node A: $\frac{5 - V_A}{100} = \frac{V_A}{100} + \frac{V_A - V_B}{100}$ ⇨ $3V_A - V_B = 5$ (1)

Apply KCL at node B: $\frac{-5 - V_B}{100} = \frac{V_B}{100} + \frac{V_B - V_A}{100}$ ⇨ $V_A - 3V_B = 5$ (2)

⇨ Solve (1) and (2): $V_A = 1.25$ V, $V_B = -1.25$ V

Mesh Current Analysis

Q7 [Modified from Alexander Problem 3.15]
Only one mesh current equation is required for this problem (marked by mesh I below). Note that the current sources already define the mesh currents in the remaining two meshes.

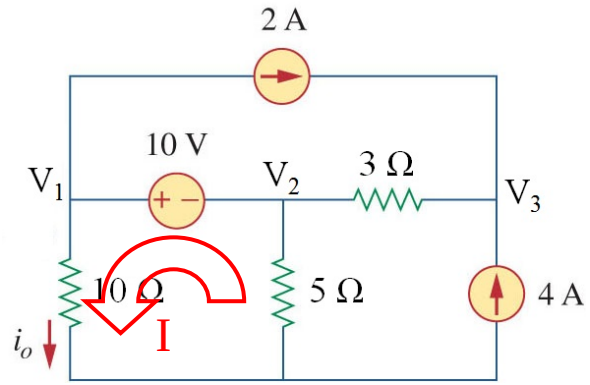

Apply KVL around mesh I: 10 = I*10 + (I – 4)*5 ⇨ solve: I = 2 A

Current through 10 Ω: $i_o = I$

V_1 can be obtained using i_o: $V_1 = i_o*10$

V_2 can then be obtained through the 10 V voltage source: $V_1 – V_2 = 10$ V

V_3 can be obtained by considering the voltage drop across the 3 Ω resistor and V_2. You will need to know the current through the 3 Ω which can be obtained simply by applying KCL at node V_3. This current has a value of 6 A ⇨ Hence: $V_3 – V_2 = 3*6 = 18$ V

Q8 [Modified from Alexander Problem 3.36]
Two mesh current equations are required for this circuit as marked out below by I_a and I_b.

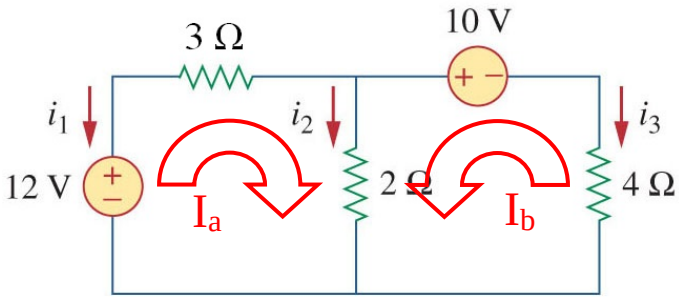

Apply KVL around mesh I_a: $12 = I_a*3 + (I_a + I_b)*2$ ⇨ $5I_a + 2I_b = 12$ (1)

Apply KVL around mesh I_b: $10 = (I_b + I_a)*2 + I_b*4$ ⇨ $I_a + 3I_b = 5$ (2)

Solving (1) and (2): $I_a = 2$ A, $I_b = 1$ A

The branch currents can be found by considering the following relations:
$i_1 = -I_a$; $i_2 = I_a + I_b$; $i_3 = -I_b$ A

Q9 [Alexander Problem 3.51]

Two mesh current equations are required for this circuit as marked out below by I_a and I_b.

Copyright © The McGraw-Hill Companies, Inc. Permission required for reproduction or display

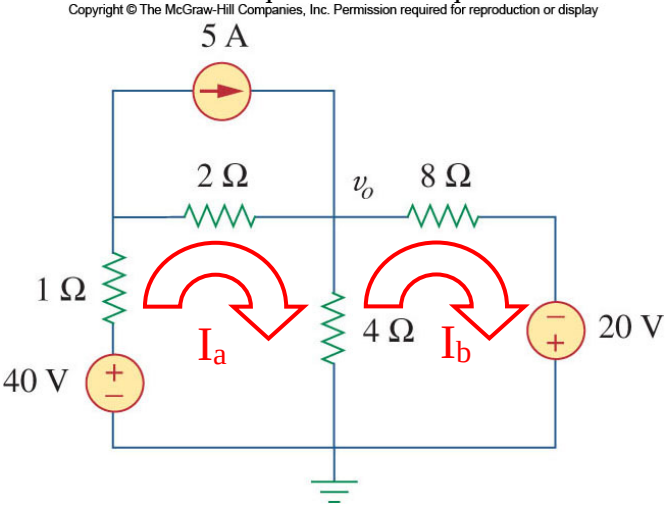

Apply KVL around mesh I_a:

$40 = I_a*1 + (I_a - 5)*2 + (I_a - I_b)*4 \Rightarrow 7I_a - 4I_b = 50$ (1)

Apply KVL around mesh I_b:

$20 = (I_b - I_a)*4 + I_b*8 \Rightarrow 3I_b - I_a = 5$ (2)

Solving (1) and (2): $I_a = 10$ A, $I_b = 5$ A

Finally, v_o can be found using the current through the 4 Ω, which is given by $I_a - I_b$ (flowing from node v_o to ground): $v_0 = (I_a - I_b)*4$