Review Questions

Q1 [Alexander Problem 4.8]

Which pair of circuits in Figure 4.68 are equivalent?

Copyright © The McGraw-Hill Companies, Inc. Permission required for reproduction or display

Copyright © The McGraw-Hill Companies, Inc. Permission required for reproduction or display

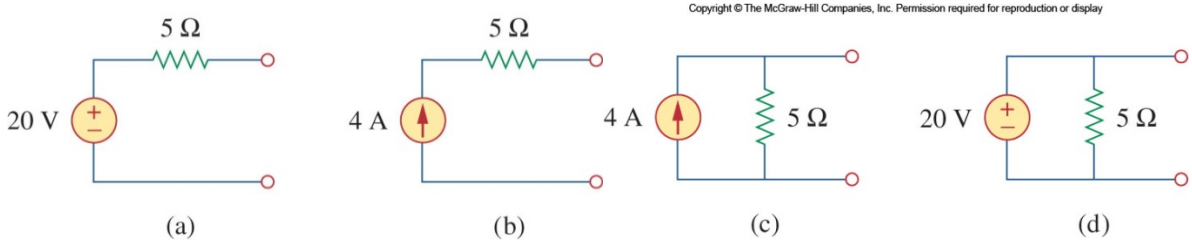

Figure 4.68

Q2 [Alexander Problem 4.4]

Obtain the Thevenin and Norton equivalent circuit at seen across terminals *a*-*b* of Figure 4.67

Copyright © The McGraw-Hill Companies, Inc. Permission required for reproduction or display

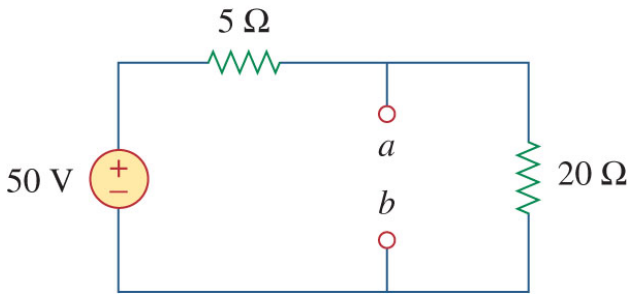

Figure 4.67

Q3

A load is connected to a network. Across the terminals where the load is to be connected, the Thevenin voltage is 40 V and the Thevenin resistance is 10 Ω. Find the value of the load required to set the load voltage across the terminals to 24 V.

Thevenin's and Norton's Theorems

Q4 [Alexander Problem 4.45]

Obtain the Norton equivalent across terminals *a*-*b* of the circuit shown in Figure 4.112.

Copyright © The McGraw-Hill Companies, Inc. Permission required for reproduction or display

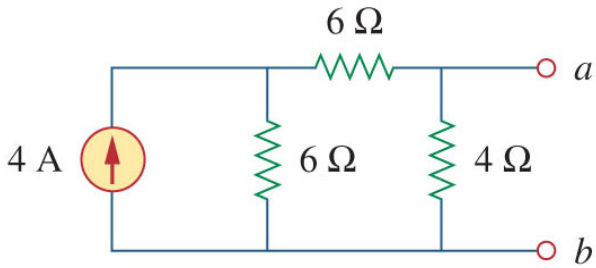

Figure 4.112

Q5 [Alexander Problem 4.39]
Obtain the Thevenin equivalent across terminals *a-b* of the circuit shown in Figure 4.106.

Copyright © The McGraw-Hill Companies, Inc. Permission required for reproduction or display

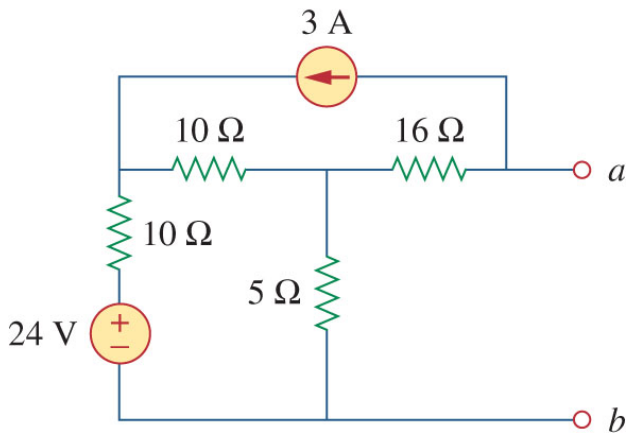

Figure 4.106

Q6 [Modified from Alexander Problem 4.34]
Obtain the Thevenin equivalent across terminals *a-b* of the circuit shown in Figure 4.102.
Let V = 10 V, I = 1 A, R_1 = 20 Ω, R_2 = 30 Ω, R_3 = 6 Ω.

Copyright © The McGraw-Hill Companies, Inc. Permission required for reproduction or display

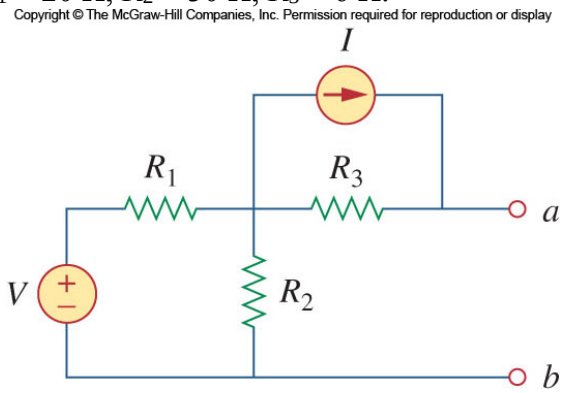

Figure 4. 102

Q7 [Alexander Problem 43.7]
Obtain the Norton equivalent across terminals *a-b* of the circuit shown in Figure 4.104.

Copyright © The McGraw-Hill Companies, Inc. Permission required for reproduction or display

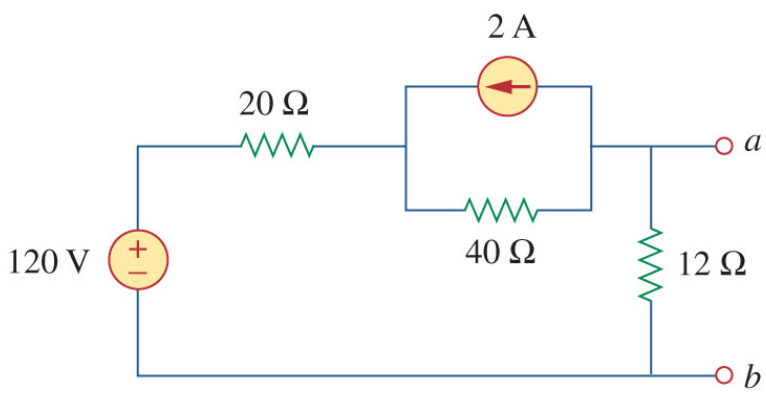

Figure 4.104

Q8 [Modified from Rizzoni Problem 3.54]
Obtain the Norton equivalent across terminals *a-b* of the circuit shown in Figure P3.54.

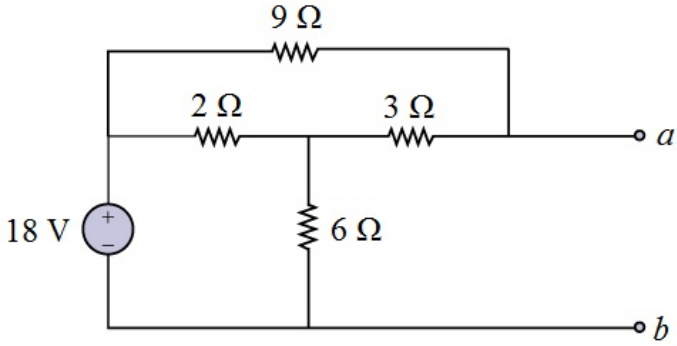

Figure P3.54

Source Transformation

Q9 [Alexander Problem 4.20]
Use source transformation to obtain the Norton equivalent seen across terminals *a-b* for the circuit shown in Figure 4.88

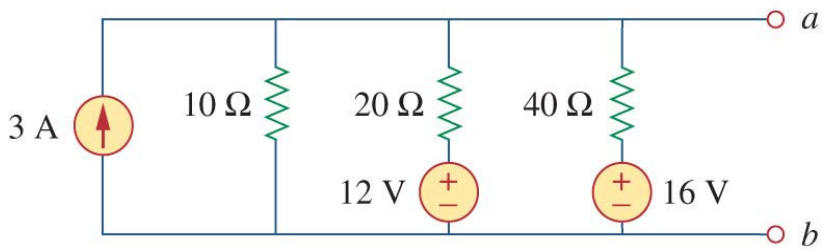

Figure 4.88

Q10 [Alexander Problem 4.27]
Using mesh current analysis on the circuit in Fig 4.94, how many mesh current equations are needed?
Using nodal voltage analysis, how many nodal voltage equations are needed?
Use source transformation to find i_o in the circuit shown in Fig 4.94.

Copyright © The McGraw-Hill Companies, Inc. Permission required for reproduction or display

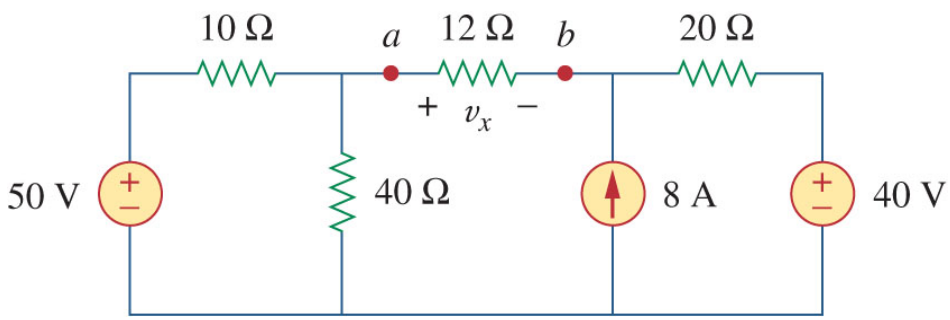

Figure 4.94

Circuit Analysis with Dependent Sources

Q11 [Problem 3.8 of Alexander & Sadiku]
Find v_o in the following circuit.

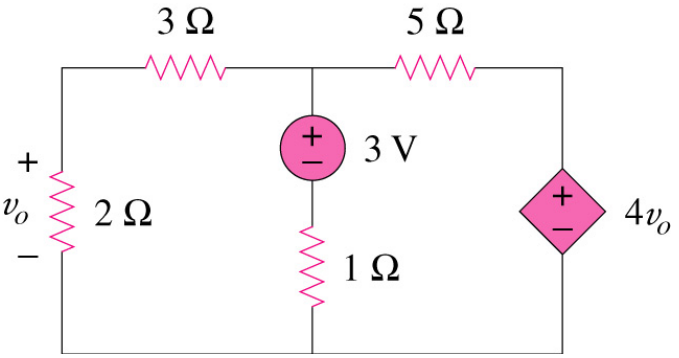

Figure 3.57

Q12 [Problem of 3.60 *Alexander & Sadiku*]
Find the current i_o

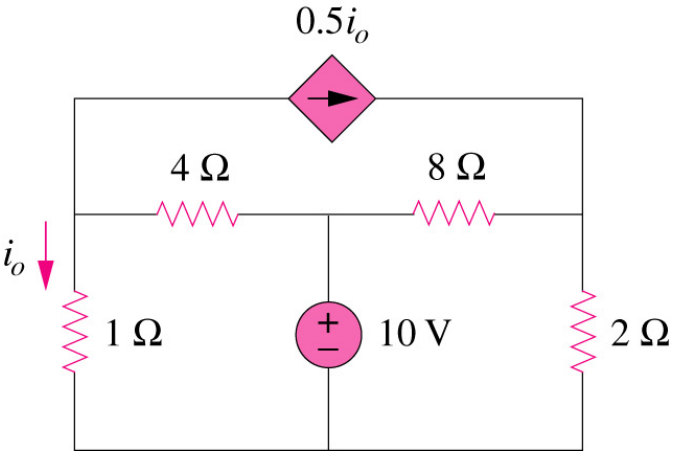

Figure 3.101

Q13 [Problem of 3.86 Alexander & Sadiku]
Find the voltage v_o in the following circuit.

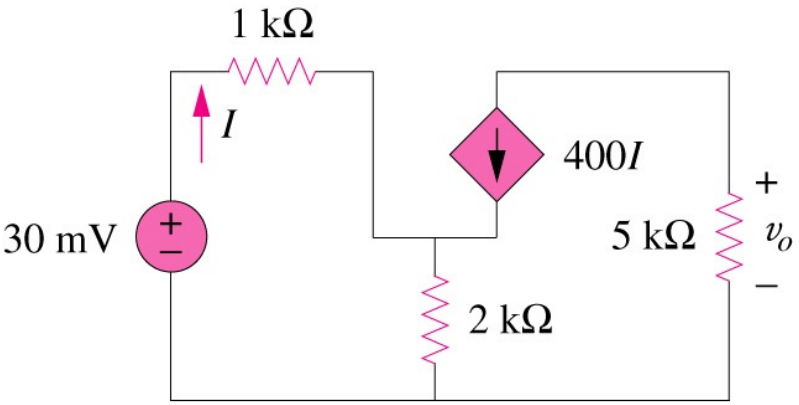

Figure 3.118

Numerical solutions

Q1 [Alexander Problem 4.8]
Circuits (a) and (c) are equivalent

Q2 [Alexander Problem 4.4]
$R_{Th} = R_N = 4\Omega$, $V_{Th} = 40$ V, $I_N = 10$ A

Q3
Required load resistance = 15 Ω

Q4 [Alexander Problem 4.45]
$R_N = 3\ \Omega$, $I_N = 2$ A

Q5 [Alexander Problem 4.39]
$R_{Th} = 20\ \Omega$, $V_{Th} = -49.2$ V

Q6 [Modified from Alexander Problem 4.34]
$V_{Th} = 12$ V, $R_{Th} = 18\ \Omega$

Q7 [Alexander Problem 4.37]
$R_N = 10\ \Omega$, $I_N = 2/3$ A

Q8. [Modified from Rizzoni Problem 3.54]
$R_N = 3\ \Omega$, $I_N = 5$ A

Q9 [Alexander Problem 4.20]
$R_N = 5.714\ \Omega$, $I_N = 4$ A

Q10 [Alexander Problem 4.27]
$v_x = -48$ V

Q11. [Problem of 3.8 *Alexander & Sadiku*]
$v_o = 1.111$V (Voltage across series combination of 3 V source and 1 Ω resistor is 2.778 V)

Q12. [Problem of 3.60 *Alexander & Sadiku*]
$i_o = 10/7$A (Voltage across 1 Ω resistor is 10/7 V)

Q13. [Problem of 3.86 *Alexander & Sadiku*]
$v_o = -74.8$mV (Voltage across the 2 kΩ resistor is 29.963 mV, I = 37.4 nA)