Review Questions

Q1. [Rizzoni Problem 2.13]

Use KCL to determine the unknown currents in the following circuit given that I_0 = -2A, I_1 = -4A, I_S = 8A and V_S = 12V.

Copyright © The McGraw-Hill Companies, Inc. Permission required for reproduction or display.

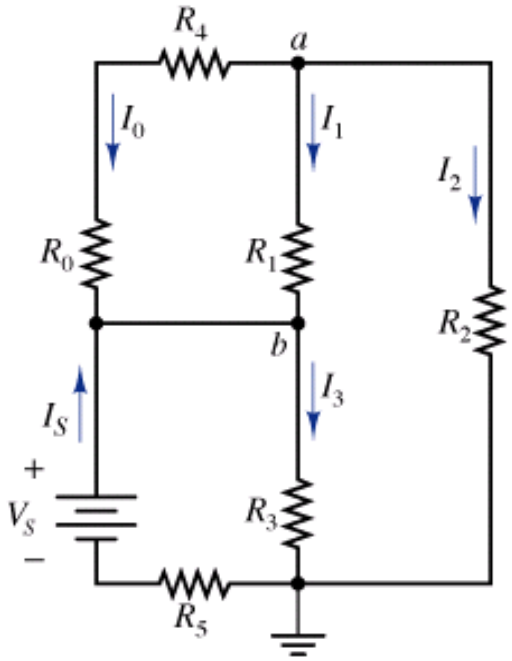

Figure P2.13

Q2. [Rizzoni Problem 2.24]

Apply KVL to Figure P2.24 to find the power dissipated or supplied for each element. Hence determine the amount of power dissipated and supplied overall.

Copyright © The McGraw-Hill Companies, Inc. Permission required for reproduction or display.

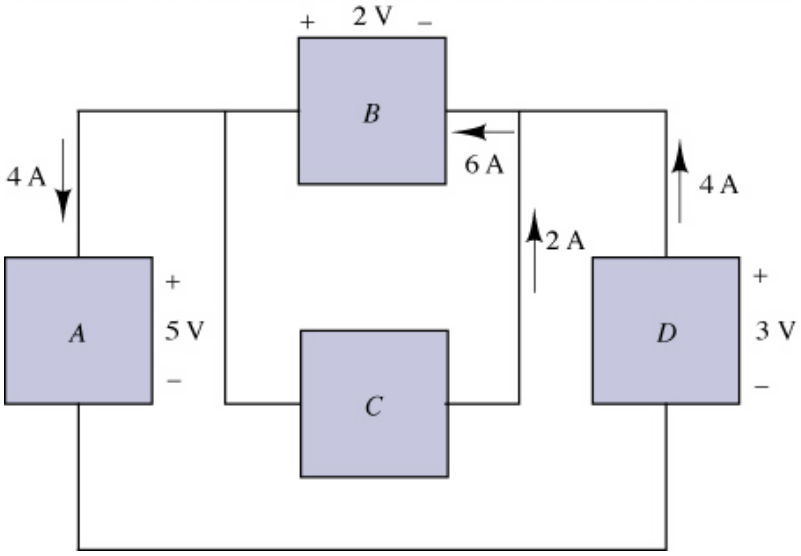

Figure P2.24

Q3. [Alexander Problem 2.12]
With reference to the circuit in Fig 2.76, find v_1, v_2, and v_3 by applying KVL.

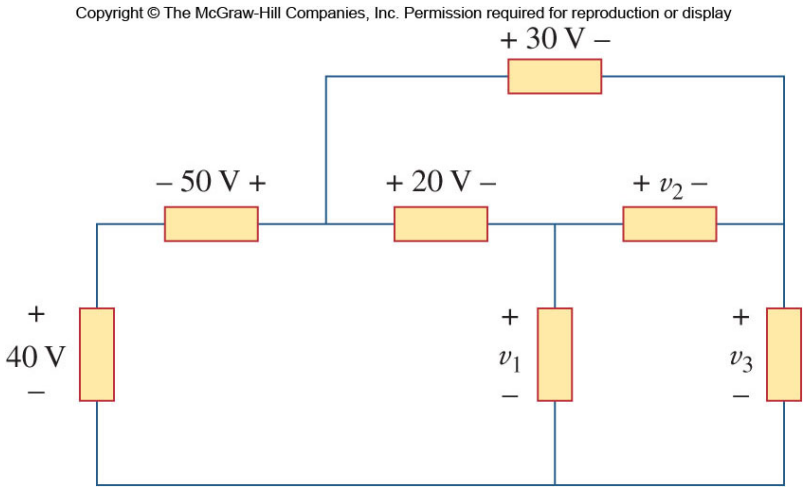

Figure 2.76

Q4. [Rizzoni Problem 2.21]
In the circuit of Figure P2.21, determine the power absorbed by the resistor *R* and the power delivered by the current source.

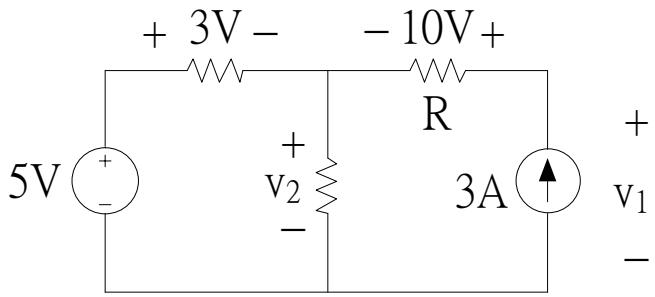

Figure P2.21

Q5. [Modified from Rizzoni Problem 2.49]
For the circuit shown in Figure P2.49, find the equivalent resistance across the terminals. Let $R_1 = 5\ \Omega$, $R_2 = 6\ \Omega$, $R_3 = 4\ \Omega$, $R_4 = 10\ \Omega$, $R_5 = 7\ \Omega$ and $R_6 = 10\ \Omega$.

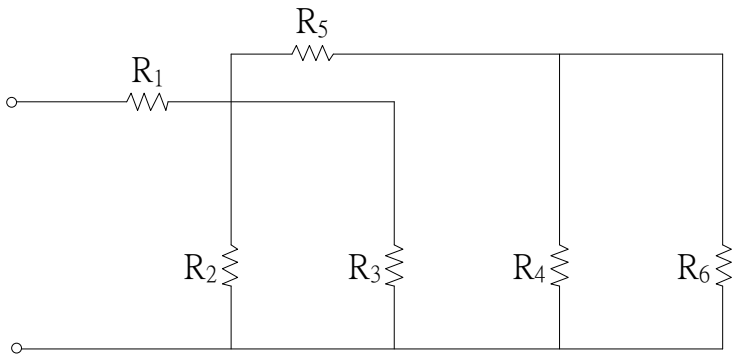

Figure P2.49

Intermediate Level

Q6. [Rizzoni Problem 2.47]
Find the equivalent resistance between terminals *a-b* in the circuit of Figure P2.47.

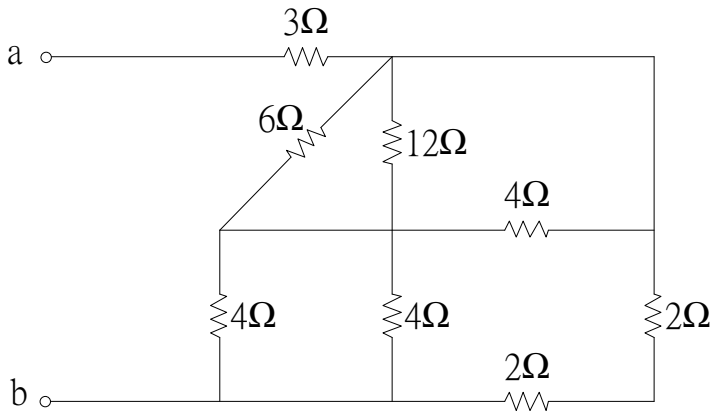

Figure P2.47

Q7. [Rizzoni Problem 2.64]
In the circuit of Figure P2.64, find the equivalent resistance:

a) Across *a-b* when (i) terminals *c-d* are open and (ii) when terminals *c-d* are shorted together.
b) Across *c-d* when (i) terminals *a-b* are open and (ii) when terminals *a-b* are shorted together.

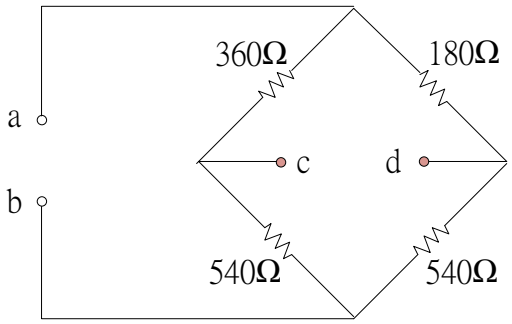

Figure P2.64

Q8. [Alexander Problem 2.18]
Apply KVL and Ohm's law to find I and V_{ab} in the circuit of Fig 2.82.

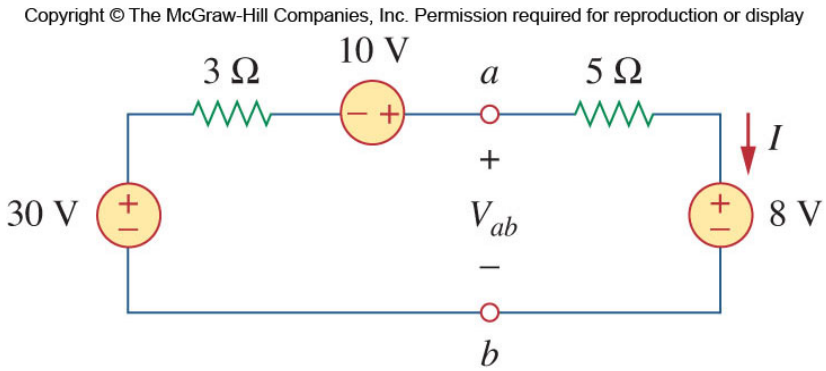

Figure 2.82

Q9. [Rizzoni Problem 2.46]

In the circuit shown in Figure P2.46, the power absorbed by the 15Ω resistor is 15W. Find R. (Hint: Find the voltage across the 15Ω resistor. Then find the equivalent resistance across the terminals of 15Ω. If we denote this resistance by R_{eq}, next use voltage divider rule with R and R_{eq} in series).

Copyright © The McGraw-Hill Companies, Inc. Permission required for reproduction or display.

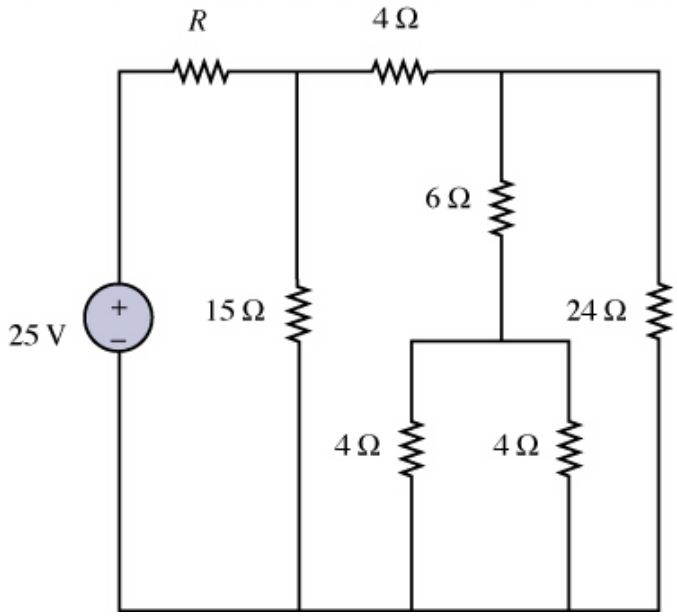

Figure P2.46

Numerical solutions

Q1. [Rizzoni Problem 2.13]
I_2 = 6A, I_3 = 2A

Q2. [Rizzoni Problem 2.24]
A = 20 W (dissipating), B = 12 W (generating), C = 4 W (dissipating), D= 12 W (generating)

Q3. [Alexander Problem 2.12]
Unknown voltage differences: v_1 = 70 V, v_2 = 10 V, v_3 = 60 V

Q4. [Rizzoni Problem 2.21]
Power consumed by resistor R: 30 W
Power supplied by current source: 36 W
Hint: You would need to find V_1 and V_2 first by applying KVL around any mesh or loop (V_1 = 12 V, V_2 = 2 V)

Q5. [Modified from Rizzoni Problem 2.49]
7 Ω

Q6. [Rizzoni Problem 2.47]
5 Ω

Q7. [Rizzoni Problem 2.64]
Part (a)(i) 400 Ω
Part (a)(ii) 390 Ω
Part (b)(i) 360 Ω
Part (b)(ii) 351 Ω

Q8. [Rizzoni Alexander Problem 2.18]
I = 4 A
V_{ab} = 28 V

Q9. [Rizzoni Problem 2.46]
R = 4 Ω