Q1 Problem 9.13

Given that the voltage source follows a pulse as shown in Fig P9.13, sketch the diode current if:

a) The diode is treated as ideal
b) The diode is assumed to have an offset voltage of 0.7V

Find the power dissipated in the diode when it is conducting (just for the offset model case).

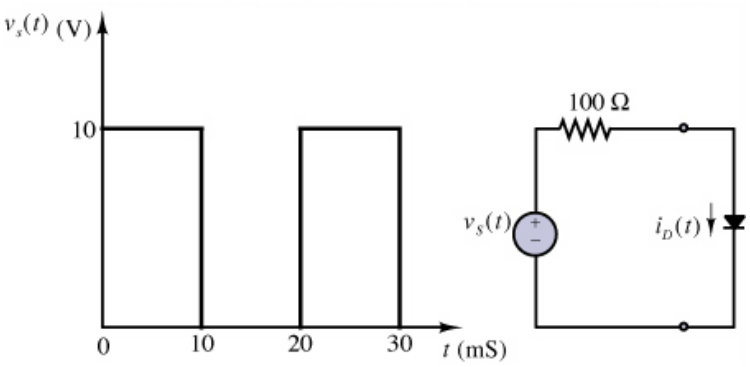

Fig P9.13

Q2 Problem 9.22

When V_{in} = 3V, determine the states of the diodes. Hence find the range of values for V_{in} such that:

(i) D_1 is OFF, D_2 is OFF
(ii) D_1 is ON, D_2 is OFF
(iii) D_1 is ON, D_2 is ON

Copyright © The McGraw-Hill Companies, Inc. Permission required for reproduction or display.

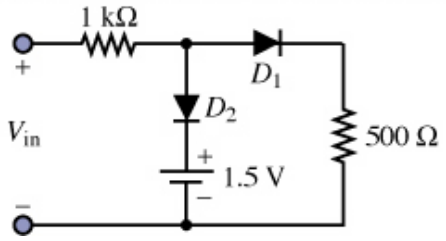

Fig P9.22

Q3 Problem 9.24

Assuming ideal diodes and vs(t) = 10sin(2000πt),
(a) Sketch $v_o(t)$ against time axis, (b) Sketch v_o against v_s

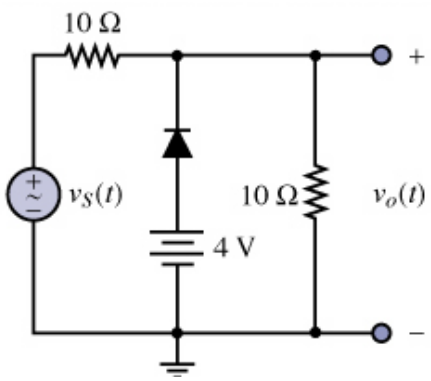

Fig P9.24

Q4 Problem 9.25

Repeat part (b) of Q3 using the offset diode model with V_γ = 0.7 V

Numerical answers

Q1 Problem 9.13

(a) Waveform: 100mA (t<10ms), 0mA (10<t<20ms), 100mA (20<t<30ms)
(b) Waveform: 93mA (t<10ms), 0mA (10<t<20ms), 93mA (20<t<30ms)

Power = 0.7*93 = 65.1mW (Power is dissipated only where there is current through the diode).

Q2 Problem 9.22

When V_{in} = 3 V, assuming D1 is ON, D2 is OFF (replace D2 with open circuit and D1 with short circuit):
Current through D1, I_{D1} = 3/1.5k = 2 mA (confirms D1 as ON✓)
Voltage across 500 Ω = 1 V → Voltage drop across D2 = 1-1.5 = -0.5 (confirm D2 as OFF✓)

If we had chosen both D1 and D2 to be ON (replace both with short circuits:
Current through D1, I_{D1} = 1.5/500 = 3 mA (confirms D1 as ON✓)
Current through 1 kΩ resistor, I_S = (3-1.5)/1k = 1.5 mA
But $I_{D1} + I_{D2} = I_S$ → I_{D2} = 1.5-3 = -1.5 mA (opposite direction: contradicts D2 as ON✗)

(i) $V_{in} < 0$ V
(ii) 0 V < V_{in} < 4.5 V
(iii) $V_{in} > 4.5$ V

Hint regarding the state of D2 for parts (i) and (ii): When D2 is just starts to conduct, the voltage across the 500 Ω resistor will be 1.5 V and the current through it is therefore 3 mA. This 3 mA has to be supplied by V_{in} as it cannot come from the 1.5 V source (think about the direction of the forward bias current in D2). This 3 mA source current will be dropped across the 1 kΩ resistor. Therefore V_{in} must be at least 4.5 V for D2 to turn on.

Q3 Problem 9.24

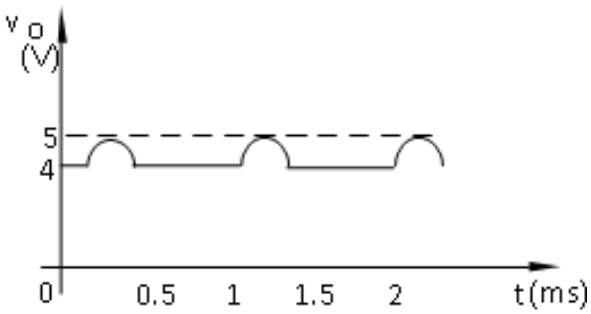

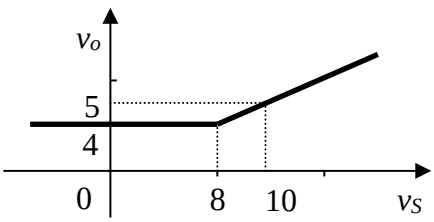

Consider the conditions that determine the state of the diode and the outcomes that result from each diode state.
When diode is off (1): $V_o = V_s/2$ (two resistors are in series for this condition)
When diode is on (2): V_o = 4V (set by voltage source and no voltage drop across diode)
The transition point is when V_o = 4V.
If V_o > 4V, diode is off and $V_o = V_s/2$ (from (1)).
Hence V_S = 8V is the transition point.
So if V_s < 8V, diode is on and V_o = 4V.
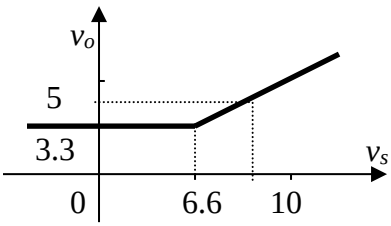
Q4 Problem 9.25