Nodal Voltage Analysis

Q1 [Alexander Problem 3.3]
Apply nodal voltage analysis to the circuit in Figure 3.52 to find v_o, I_1, I_2, I_3, I_4.

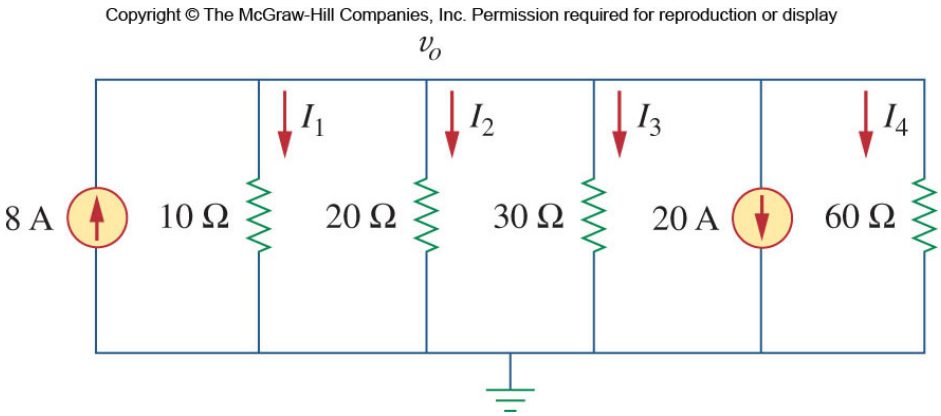

Figure 3.52

Q2 [Alexander Problem 3.5]
Apply nodal voltage analysis to the circuit in Figure 3.54 to find v_o.

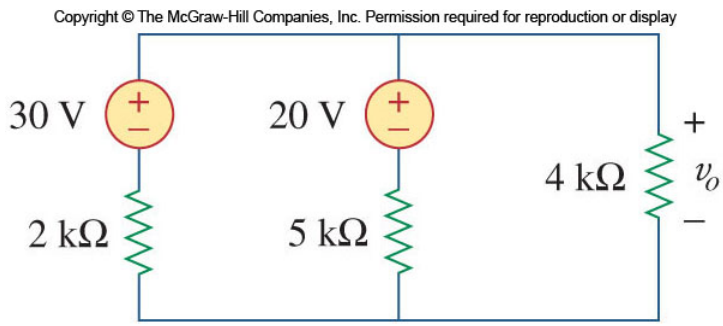

Figure 3.54

Q3 [Alexander Problem 3.11]
Apply nodal voltage analysis to the circuit in Figure 3.60 to find V_o and the power dissipated in all the resistors.

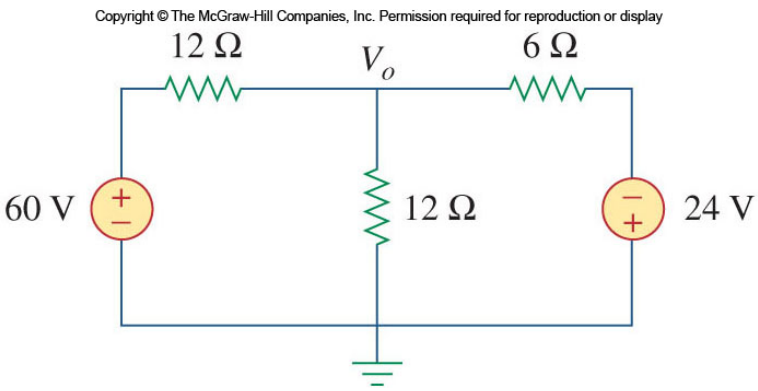

Figure 3.60

Q4 [Alexander Problem 3.32]
Find the nodal voltages v_1, v_2, v_3 in the circuit of Fig 3.81, and hence find all branch currents.

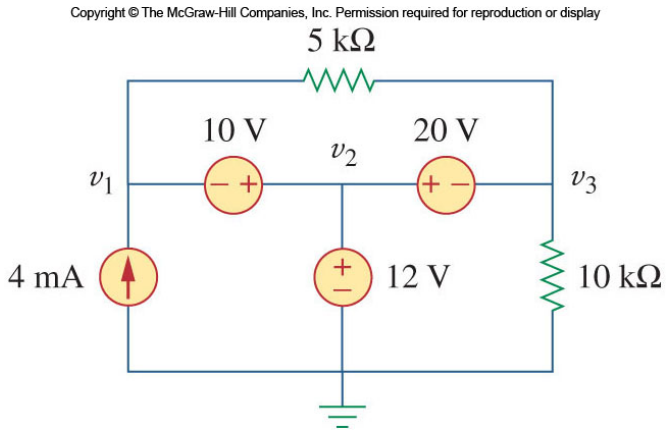

Fig 3.81

Q5 [Modified from Rizzoni Problem 3.12]
Find V_1 and V_2 in Figure P3.12 (relative to the node at the bottom of the circuit) using nodal voltage analysis. Then find V_L and use it to find the power delivered to the load resistor R_L.
Given: $R_1 = 8\ \Omega$, $R_2 = 2\ \Omega$, $R_3 = 5\ \Omega$, $R_4 = 6\ \Omega$, $R_L = 4\ \Omega$, $V_S = 4$ V, $I_S = 3$ A.

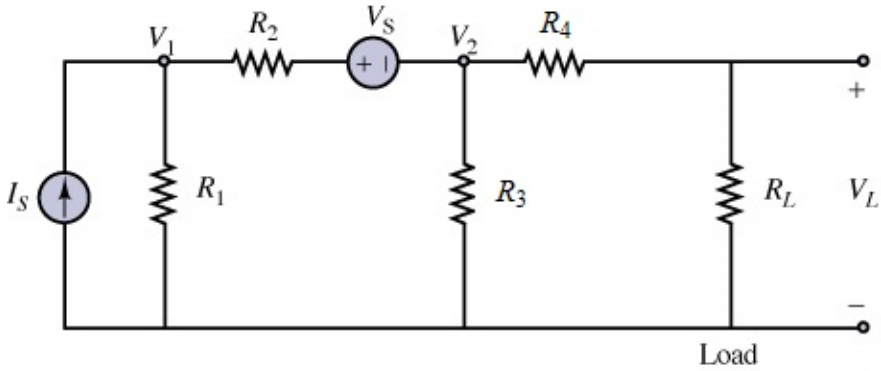

Figure P3.12

Q6 [Modified from Rizzoni Problem 3.62]
Apply nodal voltage analysis to the nodal voltage at A and B in Fig P3.5. Hence find the voltage across nodes A-B. Assume all resistors in the circuit are 100 Ω and voltage sources are 5 V.

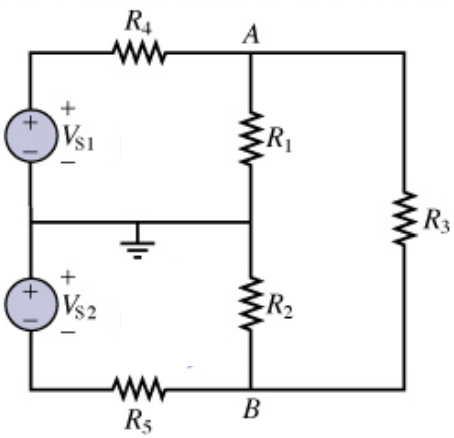

Figure P3.5

Mesh Current Analysis

Q7 [Modified from Alexander Problem 3.15]
Identify the number of mesh current equations needed to analyse the circuit in Figure 3.64. Then apply mesh current analysis to find i_o. Use i_o to find the nodal voltages V_1, V_2, V_3.

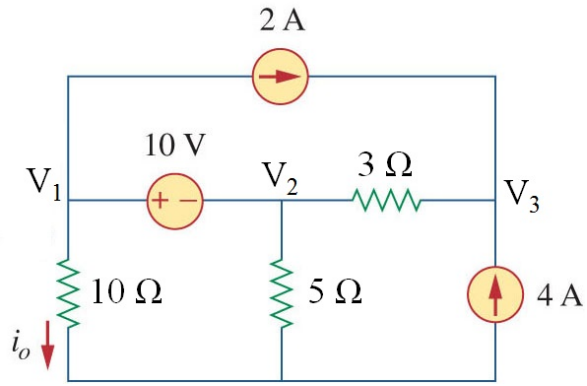

Figure 3.64

Q8 [Modified from Alexander Problem 3.36]
Identify the number of mesh current equations needed to analyse the circuit in Figure 3.84. Then apply mesh current analysis to find currents i_1, i_2, and i_3.

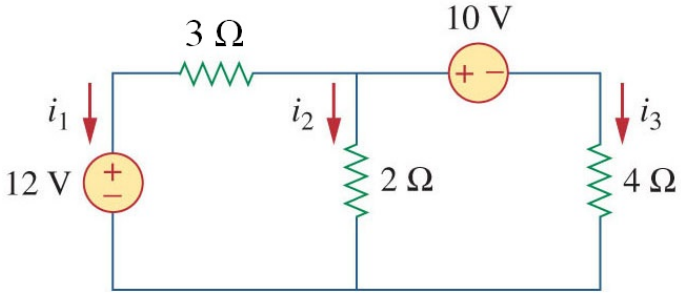

Figure 3.84

Q9 [Alexander Problem 3.51]
Identify the number of mesh current equations needed to analyse the circuit in Figure 3.96. Then apply mesh current analysis to find the voltage v_o.

Copyright © The McGraw-Hill Companies, Inc. Permission required for reproduction or display

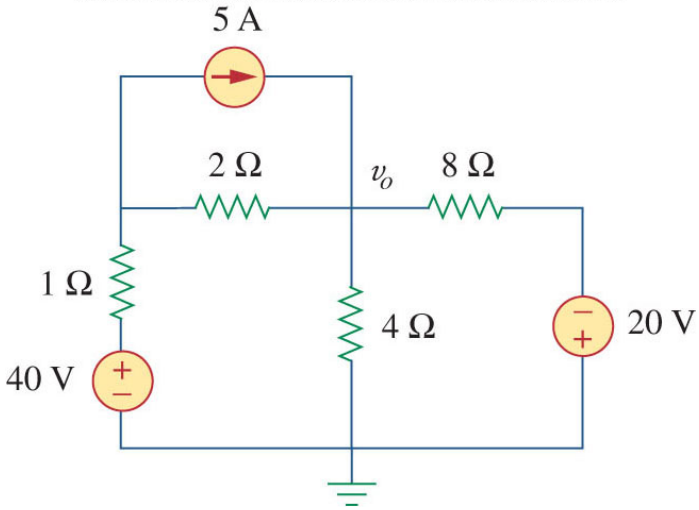

Figure 3.96

Numerical solutions

Q1 [Alexander Problem 3.3]
v_o = -60 V
I_1 = -6 A, I_2 = -3 A, I_3 = -2 A, I_4 = -1 A.

Q2 [Alexander Problem 3.5]
v_o = 20 V

Q3 [Alexander Problem 3.11]
V_o = 3 V
For the 12 Ω resistor in series with the 60 V source: P = 270.75 W
For the 12 Ω resistor between V_o and ground: P = 0.75 W
For the 6 Ω resistor: P = 121.5 W
Power generated by 60 V source = 285 W
Power generated by 24 V source = 108 W

Q4 [Alexander Problem 3.32]
v_1 = 2 V, v_2 = 12 V, v_3 = -8 V

Q5 [Modified from Rizzoni Problem 3.12]
V_1 = 12 V
V_2 = 5 V
Power delivered to R_L = 1 W

Q6 [Modified from Rizzoni Problem 3.62]
V_{AB} = 2.5V

Q7 [Modified from Alexander Problem 3.15]
Current through 10 Ω: i_o = 2 A
V_1 = 20 V, V_2 = 10 V, V_3 = 28 V

Q8 [Modified from Alexander Problem 3.36]
i_1 = -2 A; i_2 = 3 A; i_3 = -1 A

Q9 [Alexander Problem 3.51]
v_0 = 20 V