Problem Set 3 Hint Sheet

Please note this document is a hint sheet. The information contained herein is meant to guide you up to the main equations required to solve a given circuit. If you are able to get up to this point, then this document has served its chief purpose. The main focus of this course is on the concepts behind these equations. Therefore, the details on how to solve these equations lies outside of this course and therefore omitted from this document. The details contained in this document are meant to supplement the numerical answers given at the end of the problem set.

Q2

Equivalent resistance across terminals a-b

Replace voltage source with short circuit ⇨ The two resistors appear in parallel

Thevenin voltage

This is simply the voltage across terminals a-b, which can be found by applying voltage divider rule given that the two resistors are in series to the voltage source.

Norton current

Short terminals a-b and find the current through the short circuit. Note that the 20 Ω is bypassed by the short circuit. Hence the voltage from the source is dropped entirely over the 5 Ω resistor.

Q3

Let the unknown load be denoted by R_L. Note that R_L and R_{Th} are in series with a total voltage drop of V_{Th}.

Q4

Norton resistance

Replace the current source with open circuit: The objective is to find R_{ab}

Copyright © The McGraw-Hill Companies, Inc. Permission required for reproduction or display

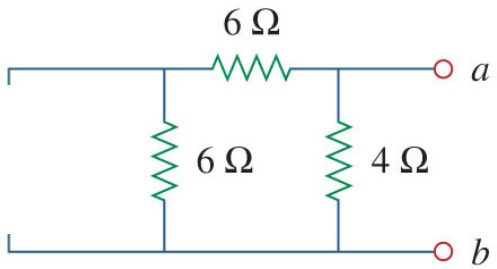

The two 6 Ω resistors are now in series ⇨ 12 Ω

This 12 Ω lies in parallel with the 4 Ω resistor ⇨ $R_N = 3\ \Omega$

Norton current

Short terminals a-b and find the current through the short circuit:

Copyright © The McGraw-Hill Companies, Inc. Permission required for reproduction or display

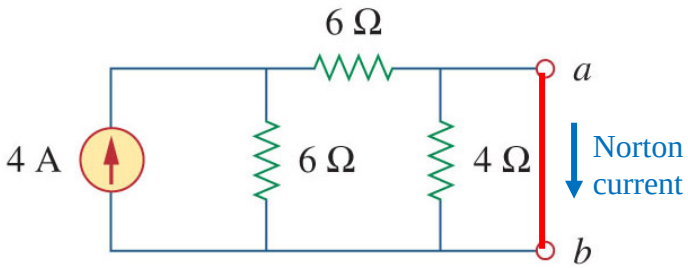

Now the 4 Ω is bypassed by the short circuit so that the two 6 Ω resistors are now in parallel. Thus the 4 A from the current source will divide equally between these two resistors. Apply current divider rule ⇨ $I_N = 4/2 = 2$ A

Q5

<u>Thevenin resistance</u>

Replace the current source with an open circuit and replace the voltage source with a short circuit: The objective is to find R_{ab}

Copyright © The McGraw-Hill Companies, Inc. Permission required for reproduction or display

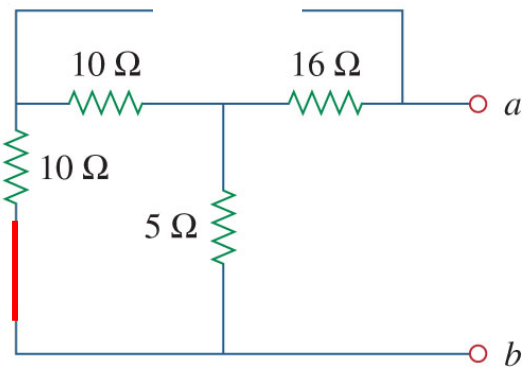

The two 10 Ω resistors are now in series ⇨ 20 Ω
This 20 Ω is parallel to the 5 Ω resistor ⇨ 4 Ω
This 4 Ω is in series with the 16 Ω resistor ⇨ $R_{Th} = 20$ Ω

<u>Thevenin voltage</u>

Copyright © The McGraw-Hill Companies, Inc. Permission required for reproduction or display

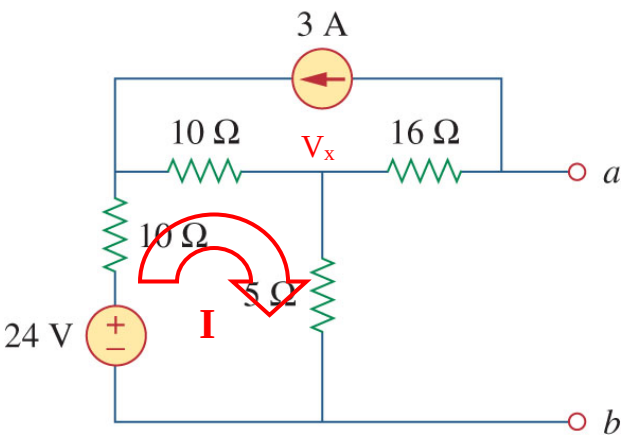

Objective: Find voltage across a-b with the least effort
Strategy: Obtain V_{ab} by using V_x and the voltage drop across the 16 Ω resistor (we know that the current through it is 3 A) ← find V_x by using MCA around mesh I.

Apply KVL mesh I: 24 = I*(10 + 5) + (I + 3)*10

Next: V_x = I*5

Finally: $V_{Th} = V_{ab} = V_x - 3*16$ (note that voltage drops from V_x to V_a)

Q6

<u>Thevenin resistance</u>

Replace the current source with an open circuit and replace the voltage source with a short circuit: The objective is to find R_{ab}

Copyright © The McGraw-Hill Companies, Inc. Permission required for reproduction or display

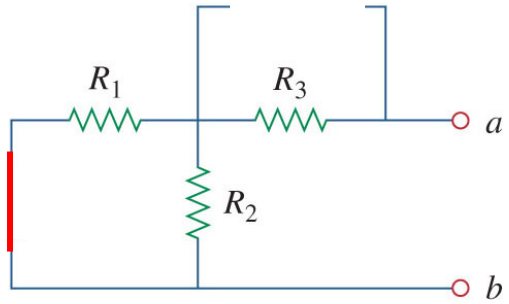

$R_{ab} = R_1 \parallel R_2 + R_3$

<u>Thevenin voltage</u>

Copyright © The McGraw-Hill Companies, Inc. Permission required for reproduction or display

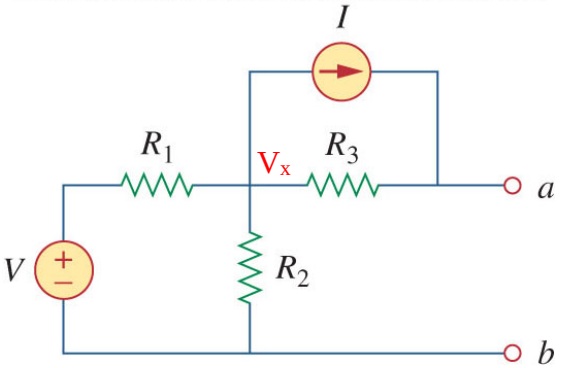

Objective: Find voltage across a-b with the least effort

Strategy: Obtain V_{ab} by using V_x and the voltage drop across R_3 (we know that the current through it is I) ← V_x can be found by voltage divider rule since R_1 and R_2 are in series (note that I does not make any contribution to the currents in R_1 and R_2).

⇨ $V_x = 6$ V, voltage drop across $R_3 = 6$ V

Q7

<u>Norton resistance</u>

Replace the current source with an open circuit and replace the voltage source with a short circuit: The objective is to find R_{ab}

Copyright © The McGraw-Hill Companies, Inc. Permission required for reproduction or display

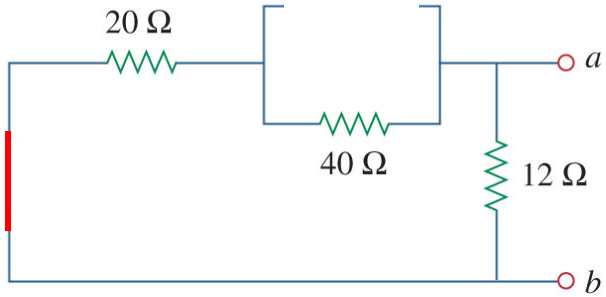

The 20 Ω and 40 Ω resistors are in series ⇨ 60 Ω; this 60 Ω is in parallel with the 12 Ω

Norton current

Short terminals a-b and find the current through the short circuit:

Copyright © The McGraw-Hill Companies, Inc. Permission required for reproduction or display

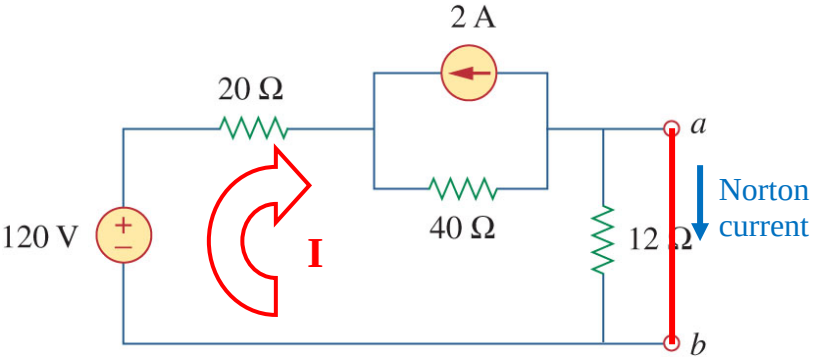

Now the 12 Ω is bypassed by the short circuit. We find the Norton current by applying mesh current analysis around the loop:

120 = I*20 + (I + 2)* 40 (12 Ω is bypassed so no voltage drop)

Q8

Norton resistance

Replace the voltage source with a short circuit: The objective is to find R_{ab}

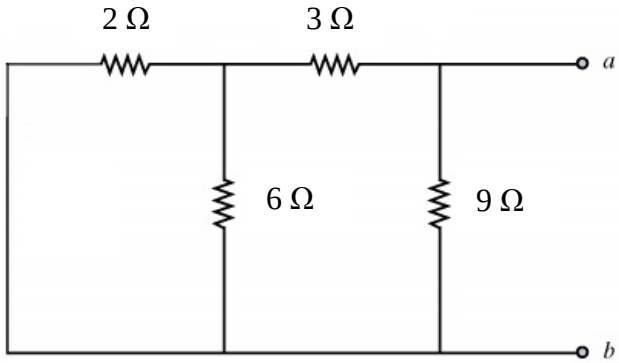

After replacing the 18 V source with a short circuit,

2 Ω resistor appears in parallel with the 6 Ω resistor ⇨ 1.5 Ω

This 1.5 Ω lies in series with the 3 Ω resistor ⇨ 4.5 Ω

This 4.5 Ω lies in parallel with the 9 Ω resistor

Norton current

Short terminals a-b and find the current through the short circuit:

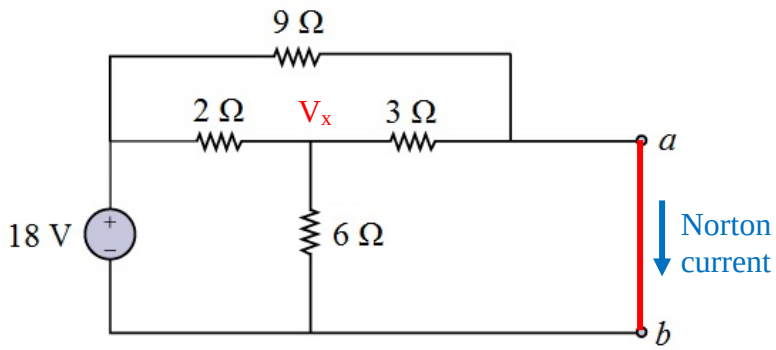

Strategy: Find the Norton current by adding up the current in the 3 Ω resistor and the current in the 9 Ω resistor ← voltage across 9 Ω set by source ← find current in 3 Ω using V_x ← find V_x by voltage divider rule.

After terminals a-b have been shorted together, the 3 Ω and 6 Ω resistors are in parallel (2 Ω). Together, they appear in series with the 2 Ω resistor with a total voltage drop of 18 V.

By voltage divider rule: $V_x = 9$ V

Current through 9 Ω = 2 A

Current through 3 Ω = 3 A

Q9

Transform the two sets of voltage sources with series resistors into Norton equivalents to obtain a parallel arrangement of 3 current sources and 3 resistors.

Series combination of 12 V source and 20 Ω resistor → 12/20 A and 20 Ω in parallel

Series combination of 16 V source and 40 Ω resistor → 16/40 A and 40 Ω in parallel

Parallel current sources combine by adding up ⇨ total of 4 A to give I_N

R_N = 10 Ω || 20 Ω || 40 Ω

Q10

Transform the networks on the left of terminal a as well as to the right of terminal b separately by removing the 12 Ω resistor first.

Network on left hand side: 50 V, 10 Ω, 40 Ω → 40 V in series with 8 Ω

Network on right hand side: 40 V, 8 A, 20 Ω → 200 V in series with 20 Ω

Insert the 12 Ω resistor back into the reduced networks:

Copyright © The McGraw-Hill Companies, Inc. Permission required for reproduction or display

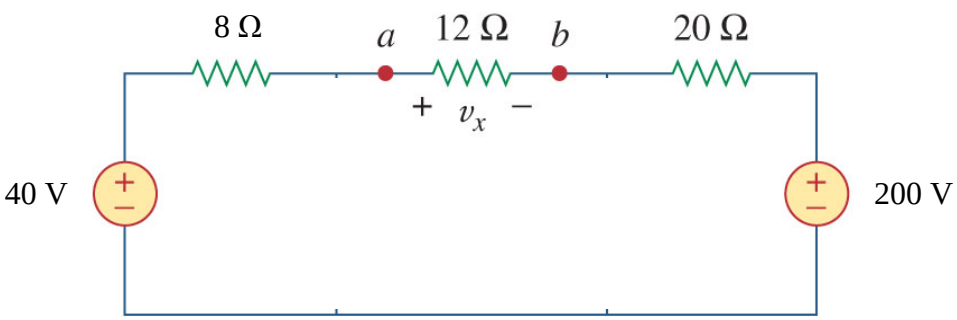

Q11

Using NVA is most convenient in this case requiring only one equation applied at node v_1. Note that v_1 represents the voltage difference across the 3V source and 1Ω resistor

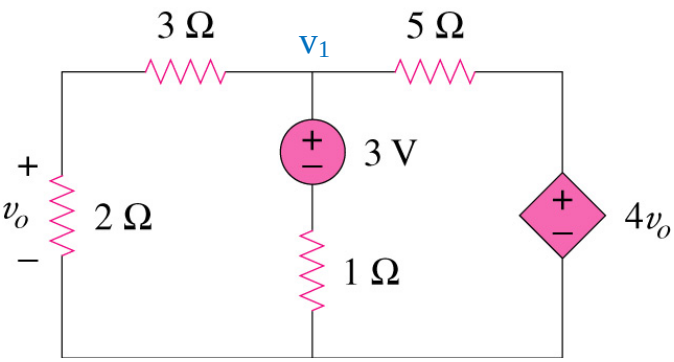

KCL at node v_1: $\frac{v_1}{5} + \frac{v_1 - 3}{1} + \frac{v_1 - 4v_0}{5} = 0$

Along the left mesh, can you see that: $v_0 = \frac{2}{5} v_1$ (voltage divider rule)?

Sub the above relation into the nodal voltage equation and solve for v_1, then use v_1 to find v_o.

Q12

Using NVA is most convenient in this case (2 unknown nodes, 1 on each side)

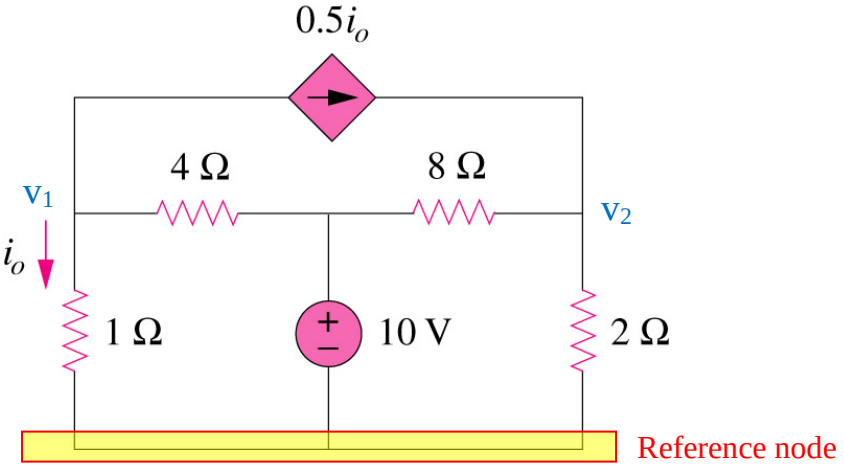

Note that $i_o = v_1$ (why?)
KCL at node v_1: $(v_1/1) + (0.5v_1/1) = (10 - v_1)/4$ ⇨ $v_1 = 10/7$ V
KCL at node v_2: $(0.5v_1/1) + ((10 - v_2)/8) = v_2/2$ ⇨ $v_2 = 22/7$ V
Use v_1 to find i_o

Q13

Use NVA (apply KCL at node above the 2kΩ resistor, denoted by v_1)

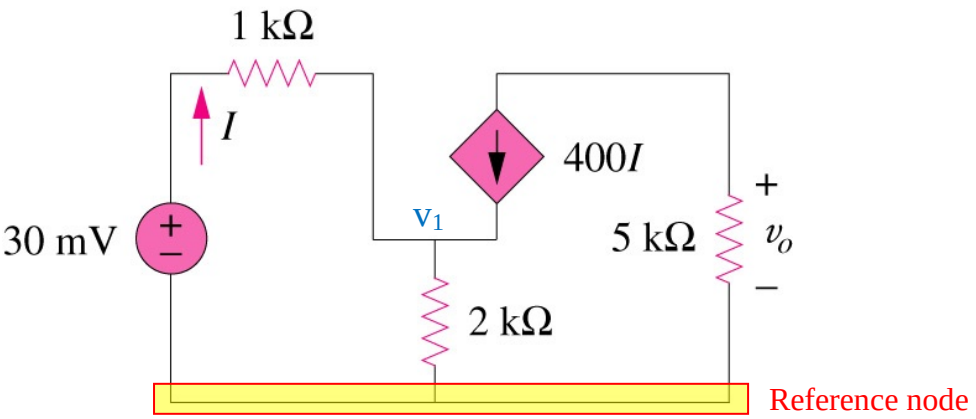

$[(0.03 - v_1)/1k] + 400I = v_1/2k$

Get rid of I in the above equation by considering the current through 1kΩ: $I = (0.03 - v_1)/1k$

⇨ $v_1 = 29.963$ mV, $I = 37.4$ nA

Now the current source value is known (400I) ⇨ use this to find v_o (pay attention to the direction of the current relative to the sign convention of the voltage across 5kΩ)